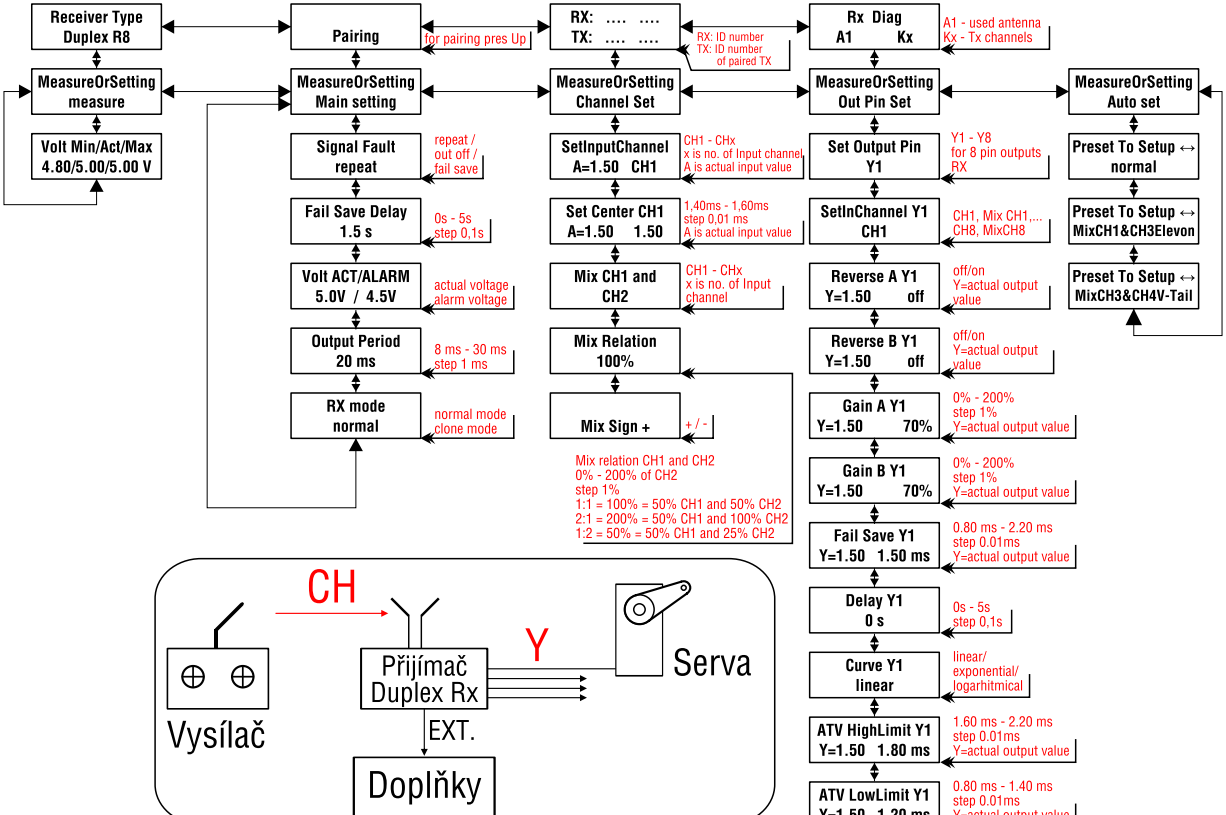
Receiver Type
Duplex R8
MeasureOrSetting
measure
Volt Min/Act/Max
4.80/5.00/5.00 V
Pairing
for pairing pres Up
MeasureOrSetting
Main setting
Signal Fault
repeat
repeat /
out off /
fail save
Fail Save Delay
1.5 s
0s - 5s
step 0,1s
Volt ACT/ALARM
5.0V / 4.5V
actual voltage
alarm voltage
Output Period
20 ms
8 ms - 30 ms
step 1 ms
RX mode
normal
normal mode
clone mode
RX: ....
TX: ....
RX: ID number
TX: ID number
of paired TX
MeasureOrSetting
Channel Set
SetInputChannel
A=1.50 CH1
CH1 - CHx
x is no. of Input channel
A is actual input value
Set Center CH1
A=1.50 1.50
1,40ms - 1,60ms
step 0,01 ms
A is actual input value
Mix CH1 and
CH2
CH1 - CHx
x is no. of Input
channel
Mix Relation
100%
Mix Sign +
+ / -
Mix relation CH1 and CH2
0% - 200% of CH2
step 1%
1:1 = 100% = 50% CH1 and 50% CH2
2:1 = 200% = 50% CH1 and 100% CH2
1:2 = 50% = 50% CH1 and 25% CH2
Rx Diag
A1 Kx
A1 - used antenna
Kx - Tx channels
MeasureOrSetting
Out Pin Set
Set Output Pin
Y1
Y1 - Y8
for 8 pin outputs
RX
SetInChannel Y1
CH1
CH1, Mix CH1,...
CH8, MixCH8
Reverse A Y1
Y=1.50 off
off/on
Y=actual output
value
Reverse B Y1
Y=1.50 off
off/on
Y=actual output
value
Gain A Y1
Y=1.50 70%
0% - 200%
step 1%
Y=actual output value
Gain B Y1
Y=1.50 70%
0% - 200%
step 1%
Y=actual output value
Fail Save Y1
Y=1.50 1.50 ms
0.80 ms - 2.20 ms
step 0.01ms
Y=actual output value
Delay Y1
0 s
0s - 5s
step 0,1s
Curve Y1
linear
linear/
exponential/
logarhitmical
ATV HighLimit Y1
Y=1.50 1.80 ms
1.60 ms - 2.20 ms
step 0.01ms
Y=actual output value
ATV LowLimit Y1
Y=1.50 1.20 ms
0.80 ms - 1.40 ms
step 0.01ms
Y=actual output value
MeasureOrSetting
Auto set
Preset To Setup ↔
normal
Preset To Setup ↔
MixCH1&CH3Elevon
Preset To Setup ↔
MixCH3&CH4V-Tail
CH
Y
Vysílač
Přijímač
Duplex Rx
Serva
EXT.
Doplňky